Recommended Code of Practice

DG Supplyline Ltd
Double Glazing & Repair Specialists

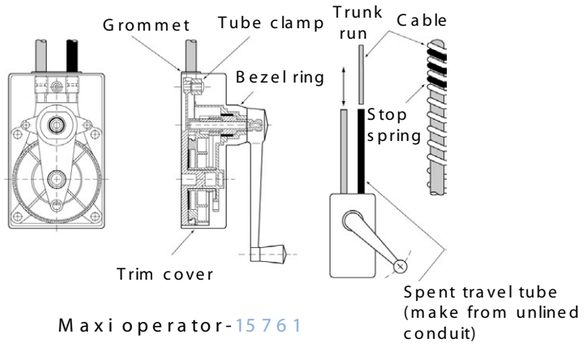

Maxi operator-15761

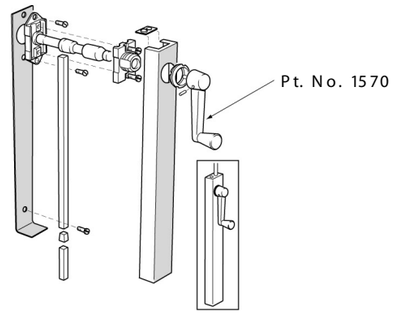

Midi operator-15751

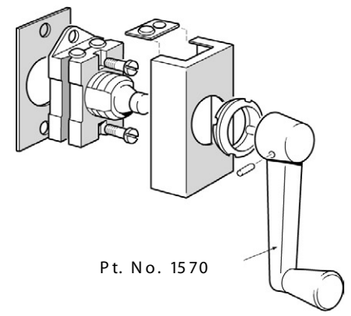

Mini operator-15741

	TOP HUNG VENTS Maximum Overall Vented Length (Metres)							CENTRE HUNG VENTS Maximum Overall Vented Length (Metres)						PROJECTED AWNING VENTS Maximum Overall Vented Length (Metres)						LOUVRES Number of Blades				
			1.8	4.2	6	8	9		1.8	8.4	10.8	10.2	12	6	7.2	8.4	8.4	9	10.8	6	10	20	40	50
250mm CHAIN OPENER					MIDI	MAXI				MIDI	MAXI				MIDI			MAXI						
400MM CHAIN OPENER				MIDI	MAXI					MIDI	MAXI			MIDI			MAXI							
CILL SCREWJACK						MIDI	MAXI					MIDI	MAXI			MIDI			MAXI					
B.H. SCREWJACK																								
LOUVRE SCREWJACK																						MIDI	MAXI	
LOCKING OPENER																								
SOLOPAK			MIDI																					

	NUMBER OF OPENERS PER VENT DEPENDENT ON AREA OF VENT (WIDTH X HEIGHT)											
	Up to .80sq.m.				.80 to 1.60sq.m.				1.60 to 2.40sq.m.			
	TH	CH	BH	PA	TH	CH	BH	PA	TH	CH	BH	PA
250mm CHAIN OPENER	1	1		1	2	1		2	3	2		3
400MM CHAIN OPENER	1	1		1	2	1		2	3	2		3
CILL SCREWJACK	1	1		1	1	1		1	2	2		2
B.H. SCREWJACK			1				1				2	
LOUVRE SCREWJACK												
LOCKING OPENER			1				2				3	
SOLOPAK												

Operator Symbols

KEY

MAXI

MIDI

MINI

The above code of practice is based on one bend only in the control path for each additional bend reduce the Vented Length Maximum by 1 metre or number of Louvre Blades by 10

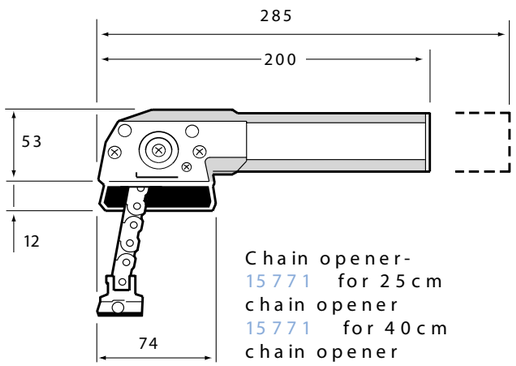
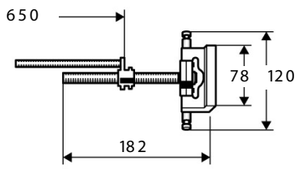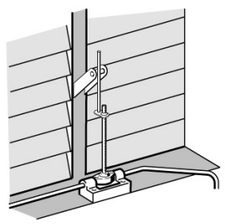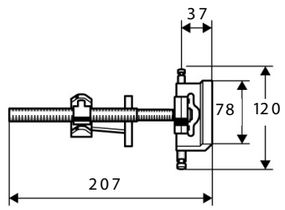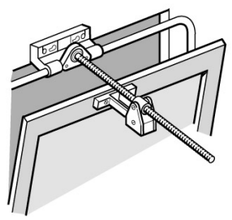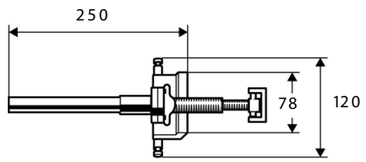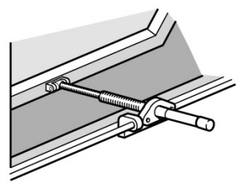
Chain opener-
15771 for 25cm chain opener
15771 for 40cm chain opener